APPENDIX A

ZORINSKY LAKE BRIDGE DESIGN CONSIDERATIONS

NDOR
Nebraska
Department of Roads

Memorandum

DATE April 17, 2015

TO Taylor Eman, Local Projects

FROM Walter Rutherford, Bridge Hydraulic Consultant Coordinator WR

THRU Kirk Harvey, Assistant Bridge Engineer - Hydraulics DKH

Project: 168th Street Improvements
STPC-3811(1)
CN: 22209
U182503110

The compliance review of the consultant's hydraulic report/design indicates it is satisfactory for the consultant to proceed with the plans.

Please find attached the Data Sheet, Plan & Profile and the TS&L, for your review and distribution.

cc: River Hwang
Jeffrey Soula
Nikolas Glennie
Sherri Bridges
File

Preliminary Data Sheet

PROJECT NO:	STPC-3811(1)	DATE:	04-03-2015
CONTROL NO:	22209	COUNTY:	Douglas
STRUCTURE NO:	U1825 03110	LOCATION:	168th Street over Zorinsky Lake
PROJECT NAME:	168th Street Improvements	SECTION:	33 T 15N R 11E
USGS DATUM:	NAVD88	DELTA DATUM:	+0.434 ft from NGVD29

SITE DESCRIPTION & DISPOSITION

Proposed improvements to 168th Street bridge over Zorinsky Lake. Existing bridge substructure to be widened and raised to accommodate 89'-8" wide proposed concrete slab bridge section.

EXISTING STRUCTURE

ORIGINAL PLAN:	Douglas Co. Proj. C-28(212)	PLAN YEAR:	1984
OTHER PLAN:		PLAN YEAR:	
STATION:	121+37.52	SUFFICIENCY RATING:	77%
TYPE:	Concrete Slab	SKEW:	0°
LENGTH:	116'-0" ft	CLEAR ROADWAY WIDTH:	28'-0" ft
SPANS:	35'-46'-35'	LOW DECK STATION:	121+95.52
LOW STRUCTURE ELEVATION:	1120.01 ft	LOW DECK ELEVATION:	1121.94 ft

PROPOSED STRUCTURE

STATION:	121+37.52	SKEW:	0°
TYPE:	Concrete Slab	CLEAR ROADWAY WIDTH:	2 @ 26' ft
LENGTH:	116'-0" ft	RAILS:	Closed
SPANS:	35'-46-'35'	CRITICAL BERM ELEVATION:	1109.4 ft
ABUT TYPE:	Extend existing wall abutment	BOTTOM OF WALL ELEVATION:	1093.4 * ft
PIER/BENT TYPE:	Extend existing wall pier	BOTTOM ENCASEMENT ELEVATION:	1097.4 ft
WING TYPE:	U-Shape		

**Bottom of pier pile cap, match existing*

GRADE

BRIDGE GRADE ABUTMENT 1:	1123.72 ft	BRIDGE GRADE ABUTMENT 2:	1122.81 ft
LOW STRUCTURE ELEVATION:	1120.63 ft	SUPERSTRUCTURE DEPTH:	1'-4 ½" ft
FREEBOARD-REQUIRED:	1.0 ft	FREEBOARD-DESIGN:	2.6 ft

ROAD OVERFLOW DESIGN: Roadway low point located 350' north of the north bridge abutment. Overtopping occurs at >Q100

DESIGN HYDRAULIC DATA

STREAM:	Zorinsky Lake		
Q100:	12,000 cfs (BASE FLOOD)	DRAINAGE AREA:	14.78 mi^2
Q100:	12,000 cfs (BRIDGE BASE FLOOD)	HW ELEVATION. (DS, Full Lake):	1,118.1 ft
Q( ):	n/a cfs (OVERTOPPING FLOOD)	LOW ROAD ELEVATION:	1,119.7 ft
Q (OHW):	n/a cfs	ORDINARY HIGH WATER ELEVATION:	1,110.4 ft
ICE-AFFECTED:	No	WATERWAY AREA BELOW HW:	1,673.7 ft^2

Q100 GENERAL SCOUR: 7.0 ft Q100 LOCAL SCOUR: 6.0 ft Q500 SCOUR ELEV: 1090.0 ft

CHANNEL DATA

SIDE SLOPES:	H 1.9 : V 1	BOTTOM WIDTH:	32.0 ft
BERM ELEVATION:	1,112.4 ft	BERM WIDTH:	11.0 ft
FLOWLINE ELEVATION:	1,097.0 ft	RIP RAP:	Type C

PERMITS

404: Yes CAUSEWAY/STRUCTURE: No LOCAL: Yes FEMA: Zone AE

TRAFFIC OPTIONS

ALIGNMENT SHIFT: No DETOUR: No TEMPORARY ROAD: No UNDER TRAFFIC: Yes

TEMPORARY STRUCTURE DESIGN: n/a Q ( ): n/a cfs SAG ELEVATION: n/a ft

COMMENTS: Bridge constructed in phases. Phase 1: traffic on existing bridge while constructing west half of proposed bridge, Phase 2: traffic on new bridge while constructing east half of proposed bridge, Phase 3: traffic on new bridge while constructing Median.

CONTRACTOR'S ACCESS CROSSING n/a

SIZE: n/a ft Q(OVERTOPPING): n/a cfs

STEPHANIE L. RATHBURN E-11928 04/03/2015 STATE OF NEBRASKA

SITE 1 OF 1
SHEET 1 OF 1

BR FORM 359A, AUGUST 2013

PROJECT NUMBER	SHEET NO.
STPC-3811(1)	24

C.N. 22209

OPW 50417

STRUCTURE NUMBER U1825 03110

This Structure is Located in Douglas County On 168th St. Over Zorinsky Lake in Sec. 33, T15N, R11E.

Note: Grade Elevations Shown are at Left and Right Profile Grade Lines Located at Back of median curb.

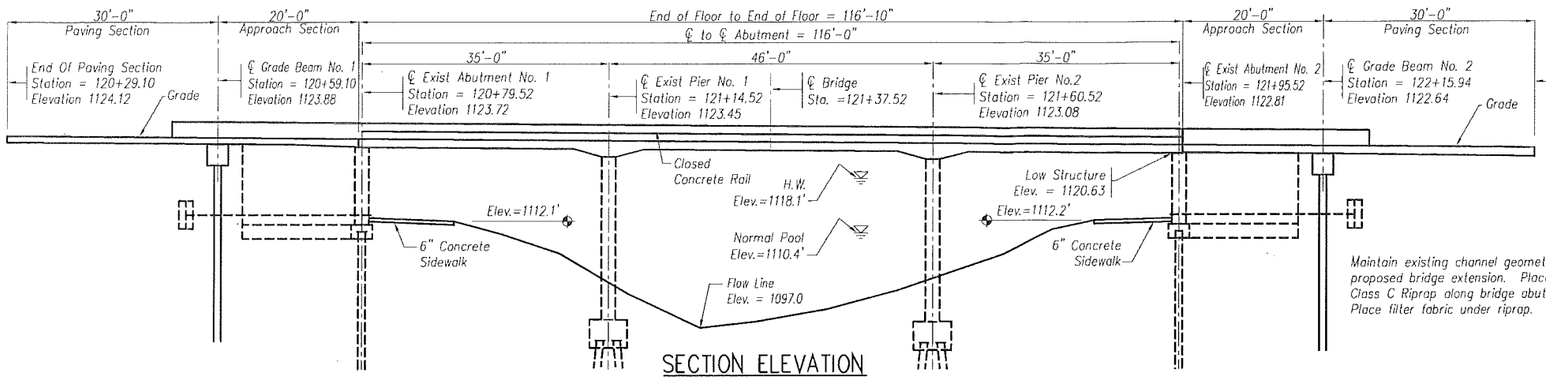

SECTION ELEVATION

Scale: 1"=20'

Maintain existing channel geometry with proposed bridge extension. Place Class C Riprap along bridge abutments. Place filter fabric under riprap.

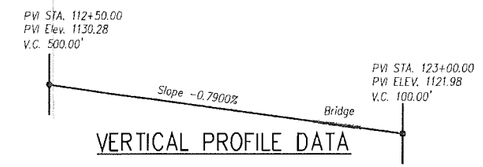

VERTICAL PROFILE DATA

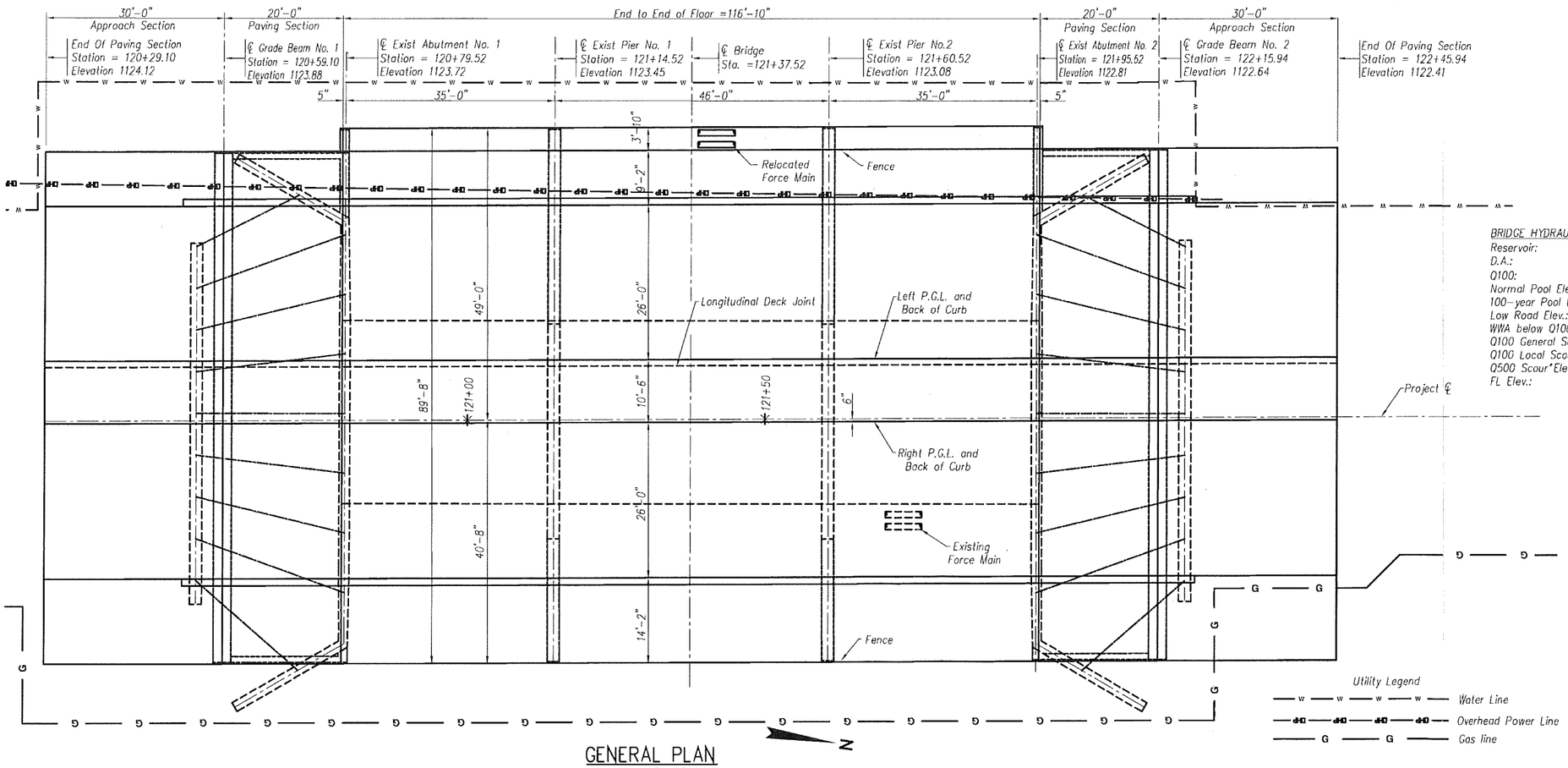

GENERAL PLAN

Scale: 1"=20'

BRIDGE HYDRAULIC INFORMATION

Reservoir:	Zorinsky Lake (Papio Creek Dam 18)
D.A.:	14.78 sq. mi.
Q100:	12,000 cfs (Design Flood)
Normal Pool Elev.:	1,110.4 ft
100-year Pool Elev.:	1,118.1 ft.
Low Road Elev.:	1,119.7 ft.
WWA below Q100 HW Elev.:	1,673.7 sq. ft.
Q100 General Scour:	7 ft
Q100 Local Scour:	6 ft
Q500 Scour*Elev.:	1090
FL Elev.:	1097.0 ft

Utility Legend

- Water Line
- Overhead Power Line
- Gas line

BRIDGE TYPE SIZE & LOCATION-168th ST.

InfraStructure, LLC
ENGINEERING CONSULTING GROUP

168TH STREET IMPROVEMENTS
GENERAL PLAN AND ELEVATION

COUNTY Douglas
HWY. NO. 168th Street
REF.POST.
STA. 121+37.52

LOCATION 168th Street over Zorinsky Lake
SKEW 0°
ROADWAY 2 @ 26'-0"
DESIGN LIVE LOAD HL93

DATE March, 2015

DESIGNED BY KAB
DETAILED BY TJL
CHECKED BY SKG

CITY OF OMAHA – PUBLIC WORKS DEPARTMENT

PROFESSIONAL STRUCTURAL ENGINEER
KAREN A. BEXTEN
E-7366
STATE OF NEBRASKA
4-7-15

SPECIAL PLAN NO. 1c

1 / 2

Sheet A

FILE: I:\projects\NE012\07P02\Dwgs & Info\ts&l\GENERAL PLAN SECTIONAL ELEVATION & PROPOSED CROSS SECTION - REVISED.dwg TS&L 1 OF 2
DATE PLOTTED: 4/16/15 2:23pm
PLOTTED BY: nmeek

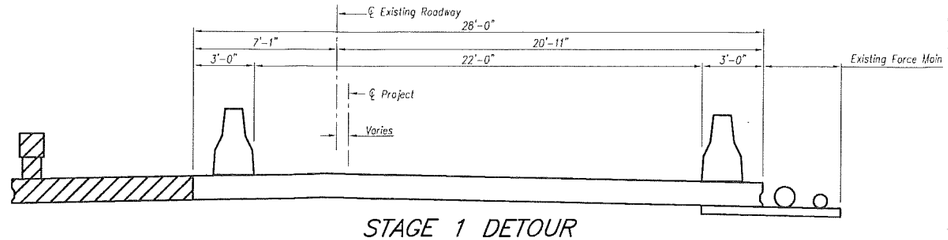

STAGE 1 DETOUR

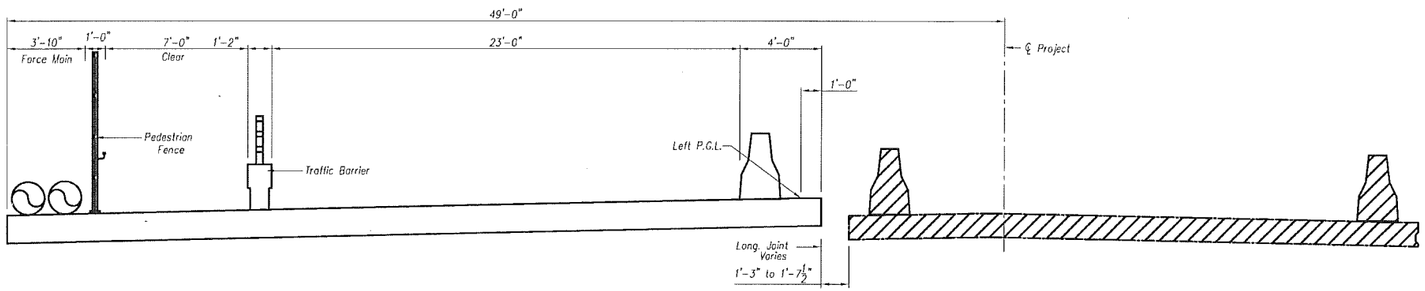

STAGE 2 DETOUR

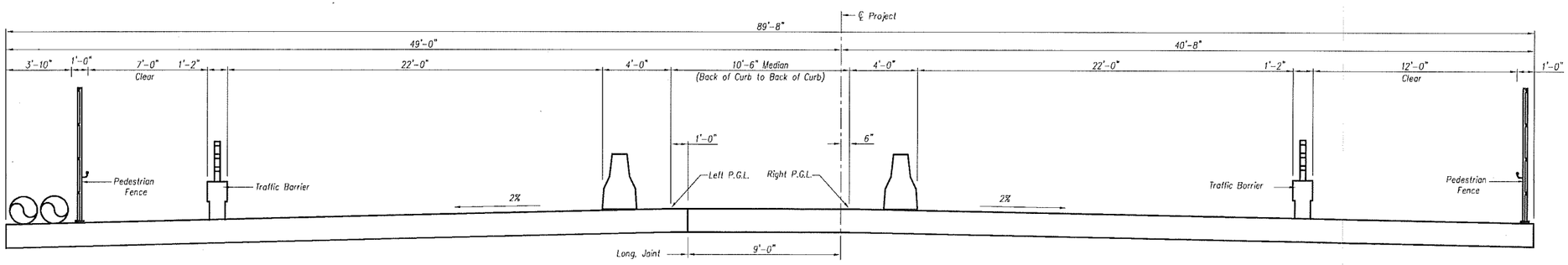

STAGE 3 DETOUR

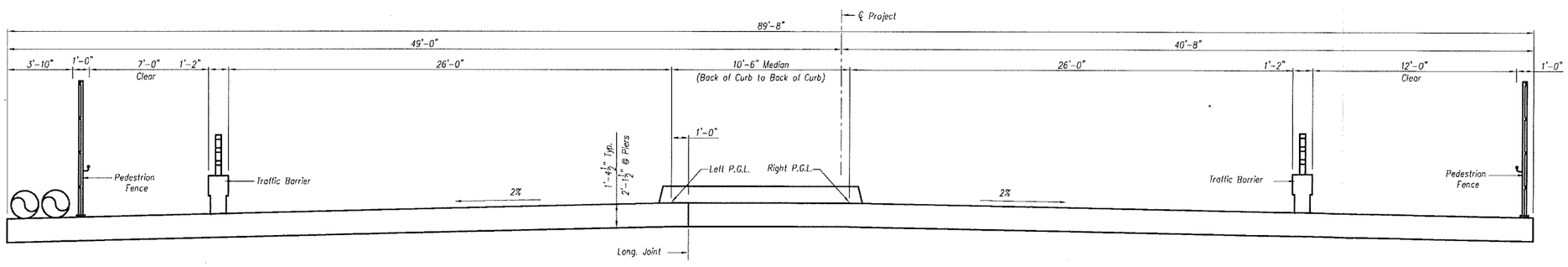

TYPICAL PROPOSED BRIDGE CROSS SECTION

BRIDGE TYPE SIZE & LOCATION–168th ST.

PROJECT NUMBER	SHEET NO.
STPC-3811(1)	25

C.N. 22209

OPW 50417

STRUCTURE NUMBER U1825 03110

CITY OF OMAHA, NEBRASKA — INCORPORATED FEBRUARY 2, 1857

168TH STREET IMPROVEMENTS
CONSTRUCTION STAGING

DATE March, 2015

CITY OF OMAHA – PUBLIC WORKS DEPARTMENT

COUNTY Douglas
HWY. NO. 168th Street
REF.POST.
STA. 121+37.52

LOCATION 168th Street over Zorinsky Lake
SKEW 0°
ROADWAY 2 @ 26'-0"
DESIGN LIVE LOAD HL93

DESIGNED BY KAB
DETAILED BY TJL
CHECKED BY SKG

PROFESSIONAL STRUCTURAL ENGINEER
KAREN A. BEXTEN
E-7366
STATE OF NEBRASKA
4-7-15

InfraStructure, LLC
ENGINEERING CONSULTING GROUP

SPECIAL PLAN NO. 1c

2 / 2

Sheet A

FILE: I:\projects\NE012\07F02\dwgs & Info\ts&l\GENERAL PLAN SECTIONAL ELEVATION & PROPOSED CROSS SECTION – REVISED.dwg TS&L 2 OF 2
DATE PLOTTED: 4/16/15 2:23pm
PLOTTED BY: nmeek

PRELIMINARY PLAN

NOT FINAL - SUBJECT TO CHANGE

PROJECT NO.	SHEET NO.
STPC 3811 (1)	7

C.N. 22209
OPW 50417

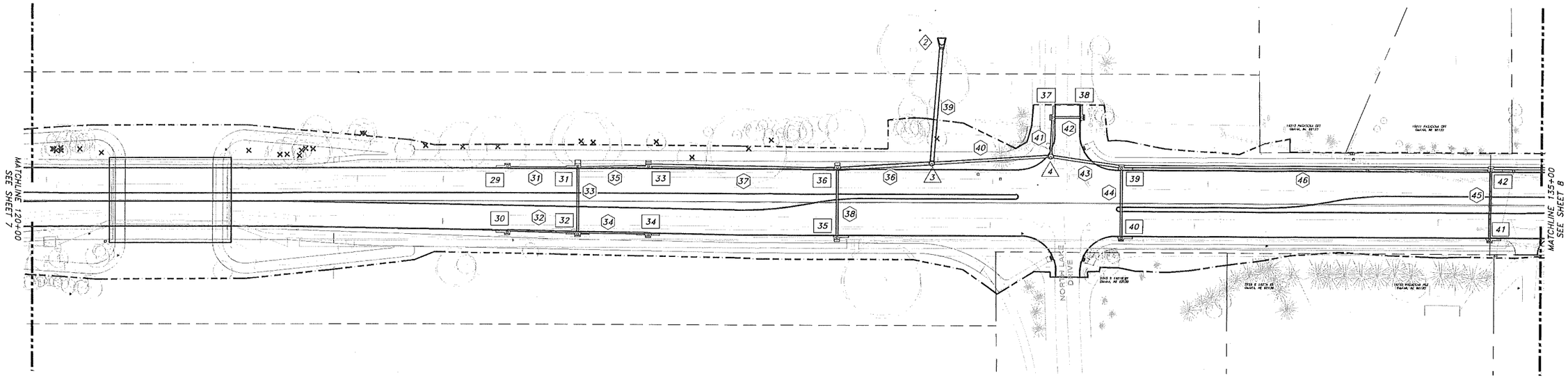

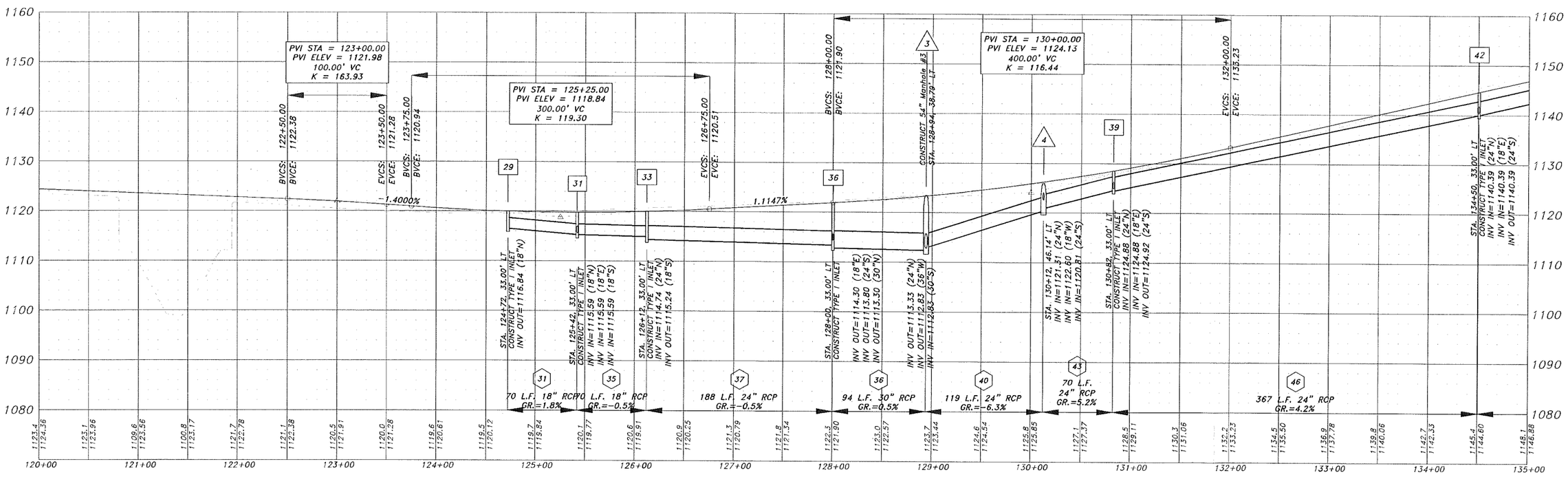

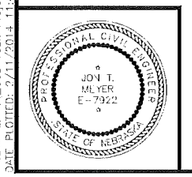

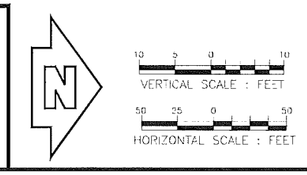

PLAN AND PROFILE

FILENAME: P:_C3D Vault Projects\OPW 50417_1661 - COMBINED\CAD\OPW 50417\Sheet layout Drawings\OPW50417_PLAN_AND_PROFILE_WIDEN.dwg
DATE PLOTTED: 9/11/2014 11:45 AM DRAWN By: TLJ SCALE: 50:1

Dave Heineman
Governor

STATE OF NEBRASKA
DEPARTMENT OF ROADS
Randall D. Peters, P.E., *Director State Engineer*
1500 Highway 2 • PO Box 94759 • Lincoln NE 68509-4759
Phone (402) 471-4567 • FAX (402) 479-4325 • www.transportation.nebraska.gov

November 14, 2013

Jon Meyer, P.E.
Public Work Department
Design Division
1819 Farnam Street Suite 601
Omaha NE 68183-0601

Re: Project No. STPC-3811(1) , Control No. 22209, 168th Street, West Center – "Q" Street

Vertical Clearance for Lake Zorinsky Bridge

Mr. Meyer,

After reviewing your request to use the minimum 8 foot vertical clearance versus the recommended 10 foot, we feel that due to the existing condition of only 8 foot vertical clearance and the potential impacts required to meet the 10 foot clearance that this will be acceptable in this situation.

Regards,

Michael Kleffner, P.E.
Urban Engineer
Local Projects Section

City of Omaha
Jean Stothert, Mayor

Public Works Department

Omaha/Douglas Civic Center
1819 Farnam Street, Suite 601
Omaha, Nebraska 68183-0601
(402) 444-5220
Fax (402) 444-5248

Robert G. Stubbe, P.E.
Public Works Director

October 24, 2013

Mike Kleffner
NDOR LPA Engineer
PO Box 94759
1400 Hwy 2
Lincoln, NE 68509-4759

ATTN: Mr. Kleffner

Re:
Request to use 8 ft. minimum vertical trail clearance for CN22209 underpass of the Lake Zorinsky Bridge.

Mr. Kleffner,

As previously discussed, the City of Omaha is seeking permission from NDOR to utilize the minimum 8ft. vertical clearance on the underpass trails located at the Lake Zorinsky bridge on project CN22209 168th St. Improvements.

The existing vertical clearance for this trail is approximately 8ft. so consequently the City of Omaha is seeking the ability to utilize the 8ft. minimum vertical height criteria for trails on CN 22209. Trail users currently utilizing this trail system have the expectation that the clearance available along this trail system will provide no more than 8ft vertical clearance so the City would like to construct the new infrastructure under this same expectation to reduce the impacts to the recreational area. Increasing the vertical clearance along this trail system to the desirable criteria of 10ft. would create impacts to the existing recreational facility that are not necessary.

Please approve are request to utilize the 8ft vertical trail clearance criteria for the 168th St Improvement project CN22209.

Regards,

Jon Meyer, P.E.
Public Works Department – Design Division
City of Omaha

jm/c:\documents and settings\jmeyer.oma\my documents\transmittal letters\utility_letter_78th n w center.doc